Knobbe Martens
INTELLECTUAL PROPERTY LAW

IP FOR A NEW AGE®

Functional Claiming in the Life Sciences

Joseph J. Mallon, Ph.D., Partner

October 19, 2016

Biotechnology/Chemical/Pharmaceutical
Customer Partnership Meeting
United States Patent and Trademark Office

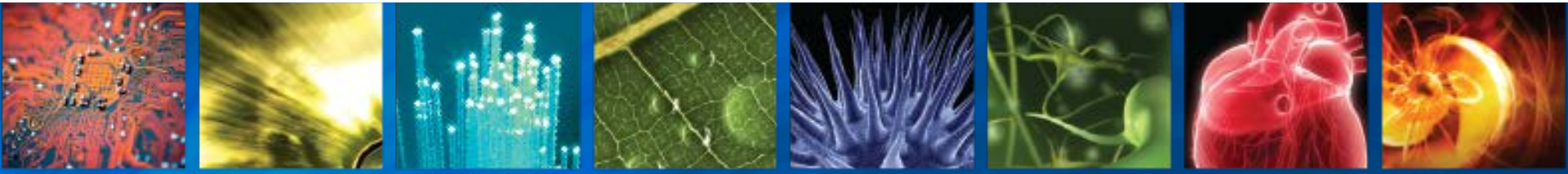

knobbe.com

Disclaimer

- The views expressed in this presentation are mine, and are not to be attributed to my firm, its clients, or anyone else.

© 2016 Knobbe, Martens, Olson & Bear, LLP all rights reserved.

Recent Focus on Functional Claims

- White House Task Force on High-Tech Patent Issues (2013)
  - "Tightening Functional Claiming . . . stakeholders remain concerned about patents with overly broad claims . . . . The PTO will provide new targeted training to its examiners on scrutiny of functional claims . . . ."
- GAO Report (2016)
  - "While 'functional claiming' is permitted by statute . . . patents that include functional claiming language were more likely to be unclear and to be disputed in court."
  - Recommendation to PTO: "Consider whether to require patent applicants to include claim clarity tools—such as . . . a check box to signal functional claim language . . . in each patent application"

© 2016 Knobbe, Martens, Olson & Bear, LLP all rights reserved.

Recent Focus on Functional Claims

- USPTO
  - § 112(f) Training (2013-2014)
  - Claim Interpretation Training
    - Examining Functional Claim Limitations: Focus on Computer/Software-related Claims (2015)
  - § 112(b) Training
    - Functional Language Workshop: Claim Interpretation And Definiteness Under 35 U.S.C. 112(b) (2016)
- Judiciary
  - Williamson v. Citrix (2015): easier to construe claims as means-plus function
  - Nautilus v. Biosig (2014): easier to find claim indefinite
  - Backdrop of § 101 decisions

© 2016 Knobbe, Martens, Olson & Bear, LLP all rights reserved.

What is Functional Claiming?

- A claim that contains functional language
  - Means-plus-function claim
  - Claim that recites something in terms of what it does
    - Structure: An agent comprising a "detectable label"
    - Quantity: Amount "effective to treat condition X"
    - Activity: A "pain reliever" or "anti-cancer" drug
    - Patient characteristic: A subject "having condition Y"
- Functional language issues for discussion today:
  - Does claim invoke § 112(f)?
  - Is claim definite?
  - Is claim supported by specification?
  - Resolving functional language issues during prosecution

© 2016 Knobbe, Martens, Olson & Bear, LLP all rights reserved.

Does Claim Language Invoke § 112(f)?

- Prior to 2015:
  - Use of "means" created presumption that § 112(f) applied
  - Lack of "means" created **strong** presumption that it didn't
- Williamson (2015): "Strong" presumption eliminated
  - If a claim lacks "means", the test for determining whether § 112(f) should apply is "whether the words of the claim are understood by persons of ordinary skill in the art to have a sufficiently definite meaning as the name for structure."
    - If no such understanding, presumption is overcome and § 112(f) applies

© 2016 Knobbe, Martens, Olson & Bear, LLP all rights reserved.

Does Claim Invoke § 112(f)?

- AGIS v. Life360 (Fed. Cir. 2016)
  - Claim term: "symbol generator"
  - Lacked "means", therefore presumption against § 112(f)
  - Both "symbol" and "generator" were well-known
  - However, "symbol generator" was a "coined term" that was "not used in common parlance"
    - Therefore, presumption against § 112(f) overcome
    - Indefinite because no corresponding structure (algorithm) in specification
- Impact of Williamson in life sciences?
  - Typically use terms with well-known meaning
  - Corresponding structure typically present in spec
  - Not indefinite if no impact on claim scope (Cox v. Sprint)

© 2016 Knobbe, Martens, Olson & Bear, LLP all rights reserved.

Is Claim Indefinite?

- Nautilus (2014) :
  - "[A] patent is invalid for indefiniteness if its claims, read in light of the specification delineating the patent, and the prosecution history, fail to inform, with **reasonable certainty**, those skilled in the art [at the time the patent was filed] about the scope of the invention."
  - "The definiteness requirement, so understood, mandates clarity, while recognizing that absolute precision is unattainable."

- MPEP § 2173.04: "Breadth is not indefiniteness."

© 2016 Knobbe, Martens, Olson & Bear, LLP all rights reserved.

Is Claim Indefinite?

- Cox v. Sprint (Fed. Cir. 2016)
  - Claim 1: A method of operating a **processing system** . . . comprising [various claim terms, including those that referred to processing system].
  - Parties agreed that § 112(f) did not apply
  - District Court: Summary judgment of invalidity under § 112(b):
    - No definition in spec
    - No established meaning in art
    - Other patents use term in different ways

© 2016 Knobbe, Martens, Olson & Bear, LLP all rights reserved.

Is Claim Indefinite?

- Cox v. Sprint (Fed. Cir. 2016)
  - Federal Circuit: Not invalid because meaning of "processing system" does not affect scope of claims
    - Novelty resides in method steps, not with machine that performs them
    - "Claims are not per se indefinite merely because they contain functional language. . . Indeed, here, functional language promotes definiteness because it helps bound the scope of the claims by specifying the operations that the 'processing system' must undertake."

- § 112(b) applies to claim as a whole, not claim terms per se

© 2016 Knobbe, Martens, Olson & Bear, LLP all rights reserved.

Is Claim Indefinite?

- General Electric v. Wabash Appliance Corp., 304 U.S. 364 (1938)
  - "But the vice of a functional claim exists not only when a claim is 'wholly' functional, if that is ever true, but also when the inventor is painstaking when he recites what has already been seen, and then uses conveniently functional language at the exact point of novelty."
  - "A limited use of terms of effect or result, which accurately define the essential qualities of a product to one skilled in the art, may in some instances be permissible and even desirable, but a characteristic essential to novelty may not be distinguished from the old art solely by its tendency to remedy the problems in the art met by the patent."

© 2016 Knobbe, Martens, Olson & Bear, LLP all rights reserved.

Is Claim Supported by Specification?

- Yeda v. Abbott (2016)
  - Issue: Does functional description of protein in priority filing provide written description support for claim?
  - US 5,244,915 claims TBP-II protein as follows:

> 1. A purified and isolated TNFα-binding protein which has a molecular weight of about 42,000 daltons and has at the N terminus the amino acid sequence
>
> Xaa Thr Pro Tyr Ala Pro Glu Pro Gly Set Thr Cys Arg Leu Arg Glu
>
> where Xaa is hydrogen, a phenylalanine residue (Phe) or the amino acid sequences Ala Phe, Val Ala Phe, Gln Val Ala Phe, Ala Gln Val Ala Phe, Pro Ala Gln Val Ala Phe or Leu Pro Ala Gln Val Ala Phe.

© 2016 Knobbe, Martens, Olson & Bear, LLP all rights reserved.

Is Claim Supported by Specification?

- Priority document disclosed characteristics of TBP-II:
  - Protocol for obtaining it from biological source
  - Molecular weight
  - Biological activity
  - Degradation properties when exposed to trypsin
  - Partial N-terminus sequence

- Undisputed that the protein disclosed was in fact TBP-II

© 2016 Knobbe, Martens, Olson & Bear, LLP all rights reserved.

Is Claim Supported by Specification?

- Federal Circuit: Yes, priority doc provides support

Under the doctrine of inherent disclosure, when a specification describes an invention that has certain undisclosed yet inherent properties, that specification serves as adequate written description to support a subsequent patent application that explicitly recites the invention's inherent properties.

© 2016 Knobbe, Martens, Olson & Bear, LLP all rights reserved.

Is Claim Supported by Specification?

- MPEP 2163.07(a): "By disclosing in a patent application a device that inherently performs a function or has a property, operates according to a theory or has an advantage, a patent application necessarily discloses that function, theory or advantage, even though it says nothing explicit concerning it. The application may later be amended to recite the function, theory or advantage without introducing prohibited new matter."

- "[A] compound and all its properties are inseparable." MPEP § 2141.02 (citing *In re Papesch*)

© 2016 Knobbe, Martens, Olson & Bear, LLP all rights reserved.

Examiner Training

- Examiner Guidance and Training Materials
  - Enhancing Clarity By Ensuring That Claims are Definite Under 35 U.S.C. 112(b) (May 20, 2016)
  - Examining Functional Claim Limitations: Focus on Computer/Software-related Claims (June 30, 2015)
  - Functional Language Workshop: Claim Interpretation And Definiteness Under 35 U.S.C. 112(b) (September 8, 2016)

© 2016 Knobbe, Martens, Olson & Bear, LLP all rights reserved.

Functional Language Workshop: Claim Interpretation And Definiteness Under 35 U.S.C. 112(b)

UNITED STATES
PATENT AND TRADEMARK OFFICE
uspto

June 2016

Overview of Workshop

- Focuses on interpreting and evaluating definiteness of functional claim limitations in product claims
- Part I:
  - Discuss the importance of properly considering functional claim limitations
  - Discuss the potential pitfalls if functional language is not given appropriate weight and if the claim boundaries are not clearly defined
- Part II:
  - A hypothetical example to practice identifying functional language, evaluating whether the language imposes limits on the claim, and determining whether the language is definite

Workshop Goals

- Understand the importance of properly interpreting functional language in claims
  - Claims define the boundaries of patent protection for the invention – all words in a claim must be considered
- Recognize definiteness issues that may arise with respect to functional language and understand how to resolve them during examination
  - If a claim is unclear, raising and resolving § 112(b) issues in the written record will enhance patent quality by reflecting the mutual understanding of the scope and content of the claim reached by the examiner and the applicant
- Ensure that the written record clearly establishes the boundaries of functional language in claims
  - Provides public notice of the scope of coverage
  - Serves as a source of claim interpretation for the Patent Trial and Appeal Board (PTAB) and courts

Functional Language: Potential Pitfalls If Not Given Weight During Examination

- Patentability issues will be overlooked, especially under § § 112(a) and (b)
- The applicant may argue, or it may be apparent, that the functional language limitations should have been given weight, thus necessitating a non-final office action
- PTAB may not support examiner's rejection if based on improper claim interpretation
- The patentee, licensees, competitors, and the public may consider the scope of patent coverage to be different than the application scope understood by the examiner
- Patented claims will be vulnerable to validity challenges because the search was based on an incorrect claim interpretation, which can cause failure to find the best prior art
  - The patent may be involved in unnecessary litigation, interferences, reissues, *ex parte* reexaminations, *inter partes* reviews, supplemental examinations, and post-grant proceedings

Functional Language: Potential Pitfalls If Not Evaluated for Definite Boundaries under § 112(b)

- The prior art search may not encompass the best art
- Applicants are not notified of deficiencies and miss the opportunity to clarify the claim
- PTAB may not support an examiner's rejection if based on improper claim interpretation, thus resulting in a reversal or a remand for further prosecution
- The patent owner may believe that the patent covers more than is justified and may over-assert the patent rights against competitors
- Competitors and the public may not understand the scope of coverage, which can hinder innovation for fear of infringement
- Patent claims with undefined boundaries are susceptible to invalidity challenges
  - The patent may be involved in unnecessary litigation, interferences, reissues, *ex parte* reexaminations, *inter partes* reviews, supplemental examinations, and post-grant proceedings

Discussion Example

The following example discusses a claim having functional language that provides a patentable distinction to the claim, which was recently interpreted by the Court of Appeals for the Federal Circuit.

In making its claim interpretation, among other factors, the court looked to the prosecution history, and particularly the rejections made by the examiner and the responsive arguments by the applicant in determining the meaning of the phrase at issue and whether it provided a patentable distinction to the claim.

This example highlights:

- how the interpretation of functional language affects patentability (and infringement) evaluations, and
- the importance of the prosecution record in determining the boundaries of coverage after the patent issues.

Claim with Functional Limitation

A pickup truck having:

a cab;

a bed with two side panels connected to the cab and mounted on a frame . . . the improvement comprising:

a storage compartment mounted within the bed and adjacent to one of the wheel wells; and

at least a portion of one of the side panels is hinged to provide access to at least a portion of the storage compartment wherein the side panels terminate adjacent to the frame . . .

wherein *the hinged portion is constructed such that the truck has an external appearance of a conventional pickup truck*.

Claim Interpretation

Side panel 15 extends from cut line 20 to cut line 21, and is hinged to provide access to the storage box 23. The hinges are located on the interior of the bed 12 and not visible from the exterior.

Interpreting the claim, the court gave weight to the functional limitation and construed it to mean that the hinged portion is constructed such that the storage compartment 23 is not obvious from the outward appearance of the pickup truck.

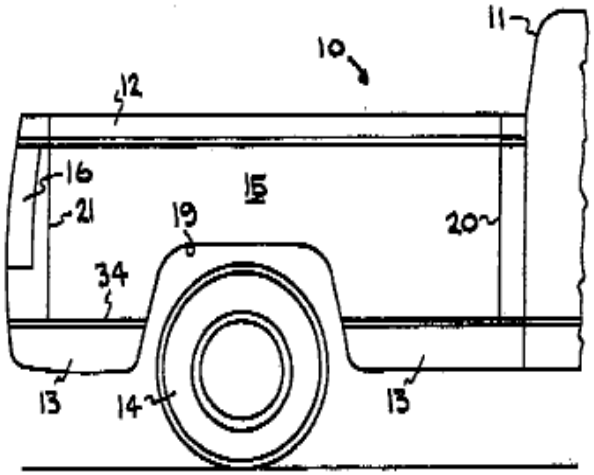

FIG. 1

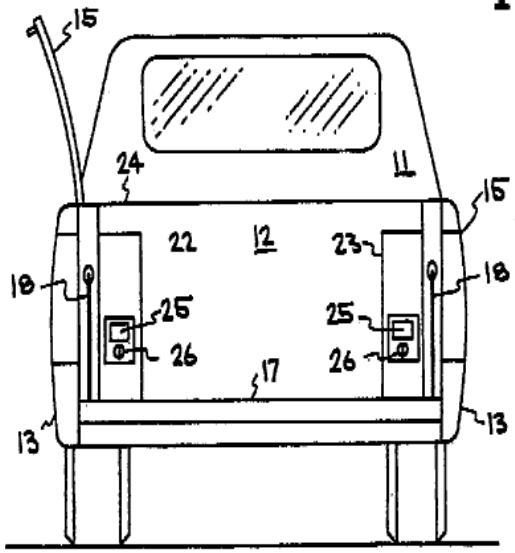

FIG. 2

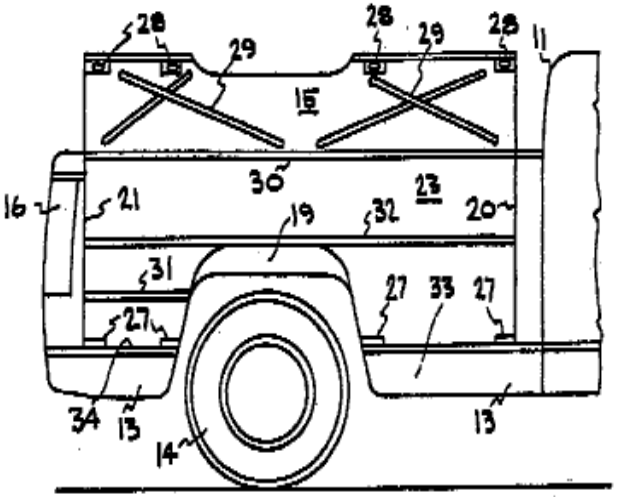

FIG. 3

Prosecution and Effect on Court Proceedings

- During prosecution, the examiner rejected claims with the "external appearance" limitation as indefinite because the cut lines for the storage box make the claimed pickup visibly distinct from a conventional pickup.
- The applicant overcame the rejection by persuasively arguing on the record that the ordinary interpretation of the external appearance limitation is that the outward aspects of the claimed pickup are like the outward aspects of a pickup without a storage box.
- The court looked to the remarks by the examiner and applicant when interpreting the meaning of the limitation finding that the interior hinges are not obviously visible from the exterior outward appearance.
- As a result, no infringement was found because the hinged portion of the storage compartment was obvious from the outward appearance of the accused pickup.

What Would Have Happened If The Functional Limitations Had Been Ignored During Examination?

- *Prior Art Effects:* The prior art search would not have been focused on hinged portions located on the interior of the truck bed, which turned out to be the defining feature of the invention.
  - A prior art rejection using art without the outward appearance feature would likely have been reversed if appealed to the PTAB, because the art would not meet all of the claim limitations
  - Applicant could have argued that the outward appearance limitation was not met by the art, which would require a new prior art search and a non-final office action
  - The patent could have issued without the best art being applied, which would then expose the patent to validity attacks in court and at the PTAB
  - The court would have not have had the advantage of using the written remarks from the examiner and applicant regarding the interpretation of that limitation when construing the claim during litigation

What Would Have Happened If The Functional Limitations Had Been Ignored During Examination?

- *Unclear Claim Boundaries*: The indefiniteness rejection would not have been made.
  - No clarifying remarks by the applicant or examiner would have been available in the prosecution record to courts or the PTAB regarding the meaning of "outward appearance," which turned out to be critical to the infringement action in court
  - If the application had been appealed to the PTAB, a rejection may not have been upheld if there was confusion over the meaning of "outward appearance"
  - Potential licensees may not understand the boundaries of protection or limits on the claim, thus diminishing the value of the patent
  - Competitors and innovators may not understand the boundaries of protection or limits on the claim, thus discouraging innovation in the field

Benefits Of The Clear Record

- The court was able to rely on the prosecution record, because it clearly explained what deficiencies the examiner addressed, and how the applicant overcame them during prosecution
  - In the context of § 112(b), this clear record improved the clarity of the outward appearance limitation, by reflecting the mutual understanding of the scope and content of the claim reached by the examiner and the applicant
  - The detailed and informative discussion in the record about the interpretation and definiteness of the outward appearance limitation benefitted the court, the patentee, and the public, *e.g.*, by clearly setting forth the protection afforded the applicant, and providing public notice as to how the claim was interpreted during examination
  - Examiner followed the "best practice" of clearly indicating on the record how the § 112(b) rejection was overcome, *e.g.*, by indicating that the § 112(b) rejection was overcome by applicant's arguments

Summary

- Patentability determinations depend on properly interpreting functional language in claims
- Recognizing and resolving definiteness issues that may arise with respect to functional language enhances patent quality
- Clearly establishing the boundaries of functional language in the written record establishes a foundation for claim interpretation throughout prosecution and the life of the patent, which benefits the examiner, the applicant, and the public

RAM BOX

Knobbe Martens

IP FOR A NEW AGE®

Joseph J. Mallon, Ph.D., Partner

Knobbe Martens Olson and Bear, LLP
Joseph.Mallon@knobbe.com

Orange County

San Diego

San Francisco

Silicon Valley

Los Angeles

Riverside

Seattle

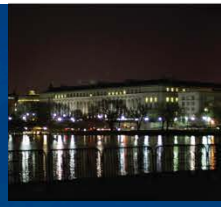
Washington DC

knobbe.com